Evaluation Kit for PA240CX

INTRODUCTION

Fast, easy breadboarding of circuits using the PA240CX are possible with the EK34 PC board. Mounting holes are provided and the provision for standard banana jacks simplifies connection and testing. The amplifier may be mounted horizontally or vertically. Components are labeled on both sides of the board for ease in probing.

A multitude of circuit configurations are possible, so only several component locations have specific functions and will usually be necessary. This kit is not suitable for use with PA240CC.

PARTS LIST

Part #	Description	Quantity
Eval 34	Evaluation Board PA40/140CX	1
Clamp04	Clamp for HS29	2
MS11	Pin Receptacle, 30 pin strip	1
TW14	Thermal Washer TO220 10/Pack	1
HS29	Heat Sink, 2.7 DEG/W	1

EQUIVALENT SCHEMATIC

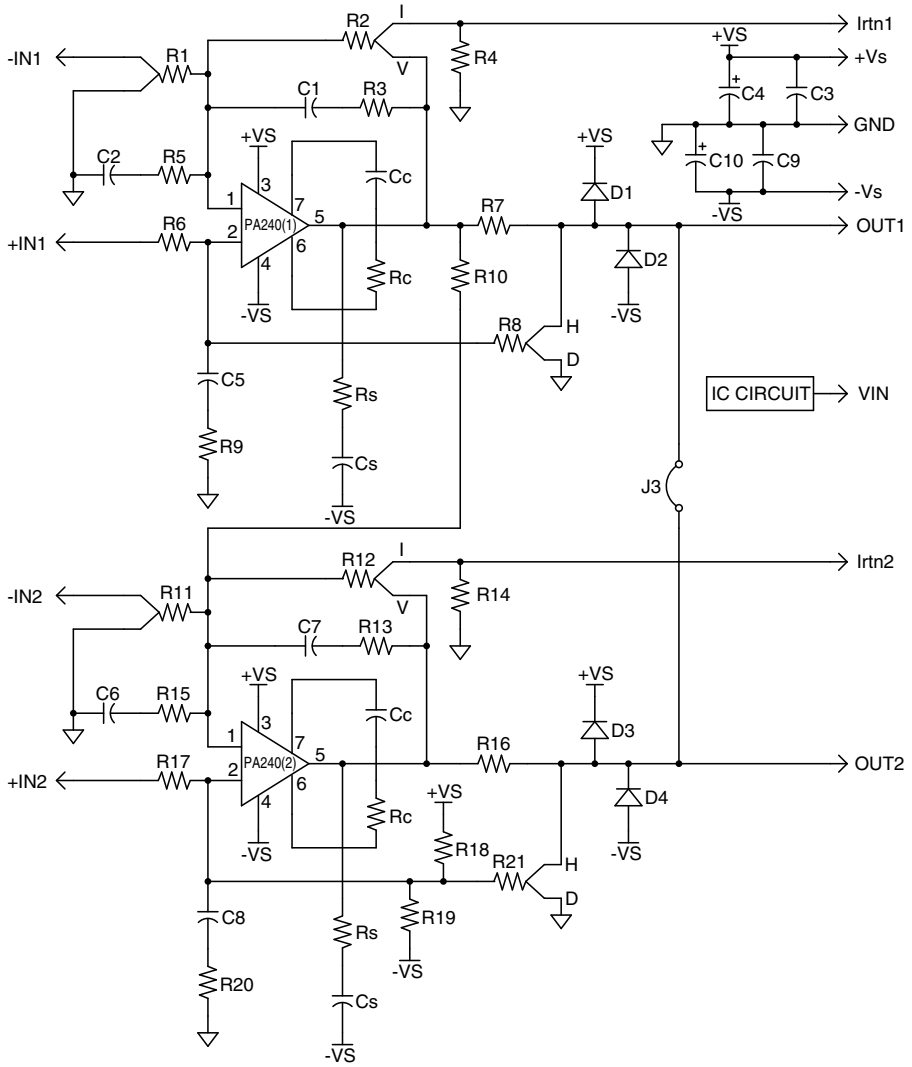

TYPICAL COMPONENT FUNCTIONS

COMPONENT	FUNCTION
C1,7	Alone is a roll off, with R3, 13 is a current out stability network (ref. AN19)
C2,6	With R6, 15 forms noise gain compensation network (ref. AN25)
C3,4	Supply bypass, .22 to 1µF ceramic
C5,8	With R9, 20 forms a Howland stability network, can jumper both to ground +IN
Cc	Sets compensation to match desired gain
Cs	Normally not used.
D1-4	Flyback protection diodes
R1,11	Inverting inputs, install to input line or to ground
R2,12	Negative feedback, install to V for voltage out or to I for current output (ref. AN19)
R3,13	With C1, 7 forms a stability network for current output (ref. AN19)
R4,14	Current sense for current outputs (ref. AN13)
R5,15	With C2, 6 forms noise gain compensation network (ref. AN25)
R6,17	Input R for Howland current pump or differential, usually shorted for non-inverting
R7,19	Current sense for Howland current pump. Could also be used to isolate large Cloads (ref. AN25)
R8,21	Positive feedback, install to H for a Howland current pump, to D for a differential circuit
R9,20	With C5, 8 forms a Howland stability net work, can jumper both to ground +IN
R10	With an equal value R12 provides gain = -1 for a bridge slave (ref. AN3,20)
R18,19	Can provide mid-supply reference for single supply bridge (ref. AN3, 20)
Rc	Normally shorted.
Rs	Normally not used.

Copyright © Cirrus Logic, Inc. 2009
(All Rights Reserved)

FIGURE 1.

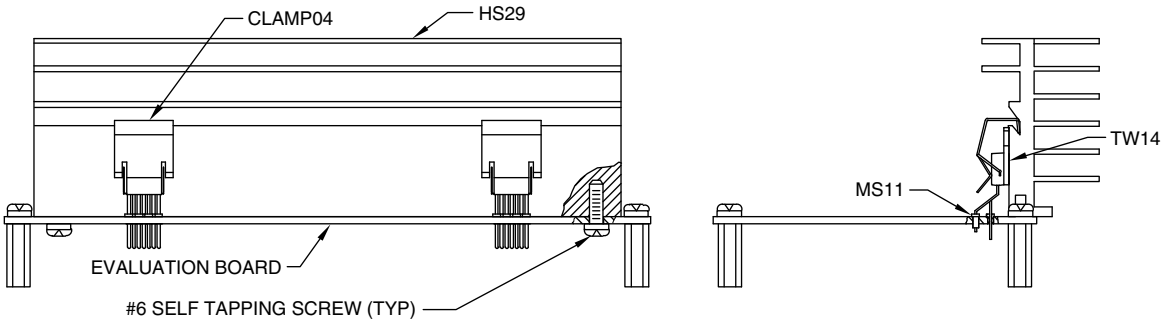

EVAL34
TOP

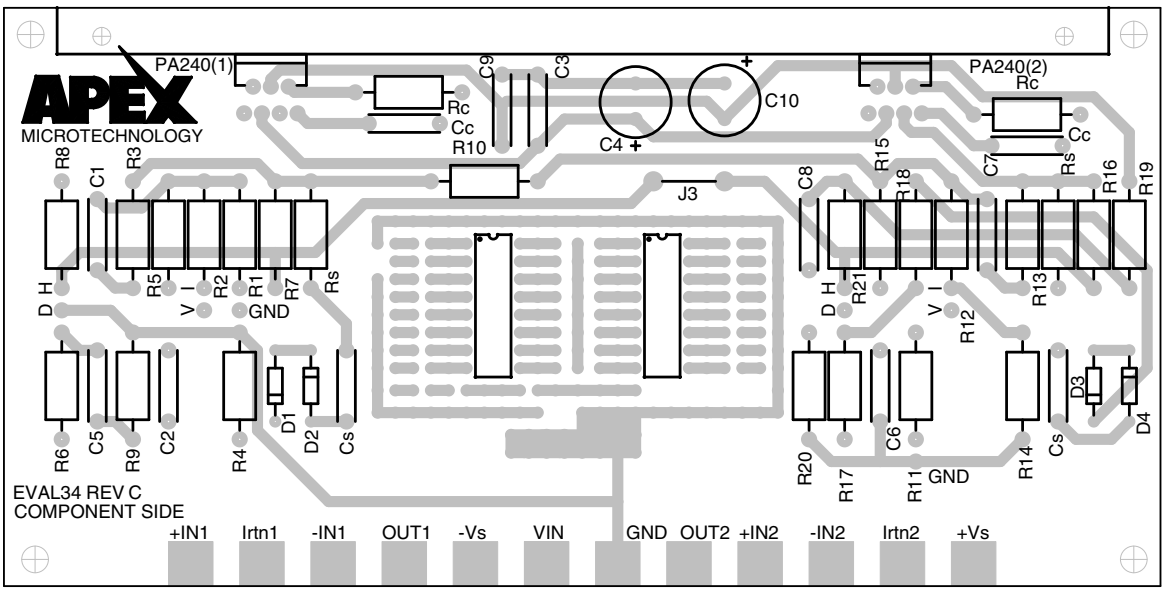

EVAL34
BOTTOM

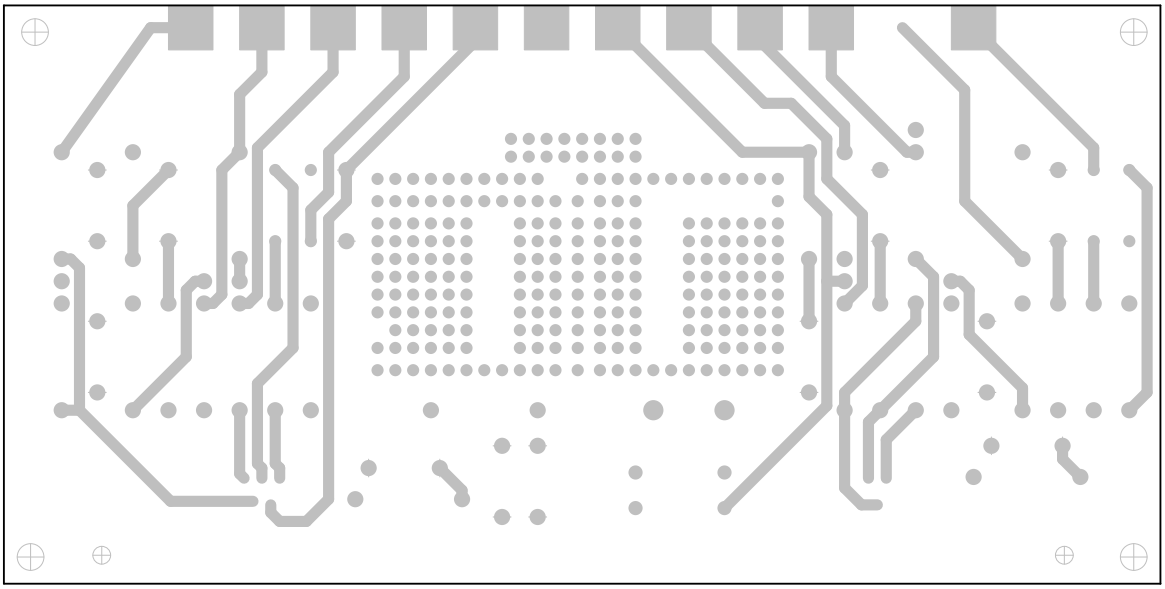

CONTACTING CIRRUS LOGIC SUPPORT

For all Apex Precision Power product questions and inquiries, call toll free 800-546-2739 in North America.
For inquiries via email, please contact apex.support@cirrus.com.
International customers can also request support by contacting their local Cirrus Logic Sales Representative.
To find the one nearest to you, go to www.cirrus.com

IMPORTANT NOTICE

Cirrus Logic, Inc. and its subsidiaries ("Cirrus") believe that the information contained in this document is accurate and reliable. However, the information is subject to change without notice and is provided "AS IS" without warranty of any kind (express or implied). Customers are advised to obtain the latest version of relevant information to verify, before placing orders, that information being relied on is current and complete. All products are sold subject to the terms and conditions of sale supplied at the time of order acknowledgment, including those pertaining to warranty, indemnification, and limitation of liability. No responsibility is assumed by Cirrus for the use of this information, including use of this information as the basis for manufacture or sale of any items, or for infringement of patents or other rights of third parties. This document is the property of Cirrus and by furnishing this information, Cirrus grants no license, express or implied under any patents, mask work rights, copyrights, trademarks, trade secrets or other intellectual property rights. Cirrus owns the copyrights associated with the information contained herein and gives consent for copies to be made of the information only for use within your organization with respect to Cirrus integrated circuits or other products of Cirrus. This consent does not extend to other copying such as copying for general distribution, advertising or promotional purposes, or for creating any work for resale.

CERTAIN APPLICATIONS USING SEMICONDUCTOR PRODUCTS MAY INVOLVE POTENTIAL RISKS OF DEATH, PERSONAL INJURY, OR SEVERE PROPERTY OR ENVIRONMENTAL DAMAGE (“CRITICAL APPLICATIONS”). CIRRUS PRODUCTS ARE NOT DESIGNED, AUTHORIZED OR WARRANTED TO BE SUITABLE FOR USE IN PRODUCTS SURGICALLY IMPLANTED INTO THE BODY, AUTOMOTIVE SAFETY OR SECURITY DEVICES, LIFE SUPPORT PRODUCTS OR OTHER CRITICAL APPLICATIONS. INCLUSION OF CIRRUS PRODUCTS IN SUCH APPLICATIONS IS UNDERSTOOD TO BE FULLY AT THE CUSTOMER’S RISK AND CIRRUS DISCLAIMS AND MAKES NO WARRANTY, EXPRESS, STATUTORY OR IMPLIED, INCLUDING THE IMPLIED WARRANTIES OF MERCHANTABILITY AND FITNESS FOR PARTICULAR PURPOSE, WITH REGARD TO ANY CIRRUS PRODUCT THAT IS USED IN SUCH A MANNER. IF THE CUSTOMER OR CUSTOMER’S CUSTOMER USES OR PERMITS THE USE OF CIRRUS PRODUCTS IN CRITICAL APPLICATIONS, CUSTOMER AGREES, BY SUCH USE, TO FULLY INDEMNIFY CIRRUS, ITS OFFICERS, DIRECTORS, EMPLOYEES, DISTRIBUTORS AND OTHER AGENTS FROM ANY AND ALL LIABILITY, INCLUDING ATTORNEYS’ FEES AND COSTS, THAT MAY RESULT FROM OR ARISE IN CONNECTION WITH THESE USES.

Cirrus Logic, Cirrus, and the Cirrus Logic logo designs, Apex Precision Power, Apex and the Apex Precision Power logo designs are trademarks of Cirrus Logic, Inc. All other brand and product names in this document may be trademarks or service marks of their respective owners.